GILL Turf Renovator, Super Turf Renovator and Core Aerator

TR72S
STR48S, STR60S, STR72S
PL48, PL60, PL72

OPERATOR'S MANUAL

WOODS

PN-51707 (Rev. 1/18/2000)

TO THE DEALER:

Assembly and proper installation of this product is the responsibility of the WOODS dealer. Read manual instructions and safety rules. Make sure all items on the Dealer's Pre-Delivery and Delivery Check Lists in the Operator's Manual are completed before releasing equipment to the owner.

The dealer must complete the Warranty Registration included in this manual. Both dealer and customer must sign the registration which certifies that all Dealer Check List items have been completed. The dealer is to return the prepaid postage portion to Woods, give one copy to the customer, and retain one copy. **Note: Warranty credit is subject to this form being completed and returned.**

TO THE OWNER:

Read this manual before operating your WOODS equipment. The information presented will prepare you to do a better and safer job. Keep this manual handy for ready reference. Require all operators to read this manual carefully and become acquainted with all the adjustment and operating procedures before attempting to operate. Replacement manuals can be obtained from your dealer or, in the United States and Canada, by calling 1-800-319-6637.

The equipment you have purchased has been carefully engineered and manufactured to provide dependable and satisfactory use. Like all mechanical products, it will require cleaning and upkeep. Lubricate the unit as specified. Observe all safety information in this manual and safety decals on the equipment.

For service, your authorized WOODS dealer has trained mechanics, genuine WOODS service parts, and the necessary tools and equipment to handle all your needs.

Use only genuine WOODS service parts. Substitute parts will void the warranty and may not meet standards required for safe and satisfactory operation. Record the model number and serial number of your equipment in the spaces provided:

Model: _____ **Date of Purchase**_____

Serial Number: (see Safety Decal section for location)_____

Provide this information to your dealer to obtain correct repair parts.

Throughout this manual, the term **IMPORTANT** is used to indicate that failure to observe can cause damage to equipment. The terms **CAUTION**, **WARNING** and **DANGER** are used in conjunction with the Safety-Alert Symbol, (a triangle with an exclamation mark), to indicate the degree of hazard for items of personal safety.

⚠	This Safety-Alert Symbol indicates a hazard and means ATTENTION! BECOME ALERT! YOUR SAFETY IS INVOLVED!
⚠ **DANGER**	Indicates an imminently hazardous situation that, if not avoided, will result in death or serious injury.
⚠ **WARNING**	Indicates a potentially hazardous situation that, if not avoided, could result in death or serious injury, and includes hazards that are exposed when guards are removed
⚠ **CAUTION**	Indicates a potentially hazardous situation that, if not avoided, may result in minor or moderate injury.
IMPORTANT	Indicates that failure to observe can cause damage to equipment.
NOTE	Indicates helpful information.

WOODS
DUAL
GANNON
ALLOWAY
GILL
GANNONBMP
WAIN ROY

WOODS

(Rev. 1/18/2000)

TABLE OF CONTENTS

INTRODUCTION II
MODELS 1
SPECIFICATIONS 2
GENERAL INFORMATION 3
BOLT SIZE CHART 3
SAFETY RULES . . . . . 4 – 5
SAFETY DECALS 6
BOLT TORQUE CHART 7
OPERATION 8
OWNER SERVICE 12
ASSEMBLY INSTRUCTIONS 14
INDEX TO PARTS LISTS 17
INDEX 23
WARRANTY . . . . . Back Cover

MODELS

TURF RENOVATOR
WITH SEEDBOX

72” Wide **TR72S**

SUPER TURF RENOVATORS
WITH SEEDBOX

48” Wide **STR48S**
60” Wide **STR60S**
72” Wide **STR72S**

CORE AERATORS

48” Wide **PL48**
60” Wide **PL60**
72” Wide **PL72**

SPECIFICATIONS

TURF RENOVATOR	TR72S
Working Width	71”
Overall Width	72”
Front Roller Pins (Replaceable high carbon tapered steel for good ground penetration)	1-1/2”
Rear Roller Pins (Replaceable high carbon steel)	3/8 x 1”
Bearings (Self-aligning)	Four 1”
Front Roller Diameter	8”
Rear Roller Diameter	5”
Hitch	Cat. I
Tractor HP Requirement	40 HP Max.
Weight	TR72: 610 Lbs.
With Seedbox	TR72S: 762 Lbs.
Seedbox Only	S72: 152 Lbs.
Seedbox Capacity	6 Bushel
Seed Distribution Method	Precision metered gears with flow adjustment lever

SUPER TURF RENOVATOR	STR48S	STR60S	STR72S
Working Width	47”	59”	71”
Overall Width	48”	60”	72”
Roller Pins	1-1/2”	1-1/2”	1-1/2”
	--(Replaceable high carbon tapered steel for good ground penetration)--		
Bearings (Self-aligning)	Six 1”	Six 1”	Six 1”
Front Roller	--------Adjustable to prevent crabbing--------		
Roller Diameter: Front & Rear	8”	8”	8”
Hitch	Cat. I	Cat. I	Cat. I
Tractor HP Requirement	65 HP Max.	65 HP Max.	65 HP Max.
Weight	STR48: 547 Lbs.	STR60: 683 Lbs.	STR72: 854 Lbs.
With Seedbox	STR48S: 670 Lbs.	STR60S: 821 Lbs.	STR72S:1006 Lbs.
Seedbox Only	S48: 123 Lbs.	S60: 138 Lbs.	S72: 152 Lbs.
Seedbox Capacity	4 Bushel	5 Bushel	6 Bushel
Seed Distribution Method	--Precision metered gears with flow adjustment lever--		

CORE AERATOR	PL48	PL60	PL72
Working Width	48”	60”	72”
Overall Width	56”	67-1/2”	78-1/2”
Frame	--3/8” Heavy-duty frame with rack to hold additional weight--		
Pivot Shaft	------1-1/4” Shaft with reinforced structure------		
Spoons	--3/4” OD Case-hardened closed spoons, 4-1/2” penetration--		
Number of Reels	8	12	12
Number of Spoons	64	96	96
Bearings	--Greaseable journal bearings for each set of 2 spoon wheels--		
Hitch	Cat. I	Cat. I	Cat. I
Tractor HP Requirement	20 HP Min.	30 HP Min.	30 HP Min.
Tractor 3-Point Lift Requirement	----------500 Lbs. (No weight added)----------		
Maximum Additional Weight	1000 Lbs.	1000 Lbs.	1000 Lbs.
Weight	316 Lbs.	454 Lbs.	515 Lbs.

GENERAL INFORMATION

The purpose of this manual is to assist you in operating and maintaining your renovator. Read it carefully. It furnishes information and instructions that will help you achieve years of dependable performance. These instructions have been compiled from extensive field experience and engineering data. Some information may be general in nature due to unknown and varying operating conditions. However, through experience and these instructions, you should be able to develop procedures suitable to your particular situation.

The illustrations and data used in this manual were current at the time of printing, but due to possible inline production changes, your machine may vary slightly in detail. We reserve the right to redesign and change the machines as may be necessary without notification.

WARNING

- **Some illustrations in this manual may show the renovator with safety shields removed to provide a better view. The renovator should never be operated with any safety shielding removed.**

Throughout this manual, references are made to right and left direction. These are determined by standing behind the equipment facing the direction of forward travel.

BOLT SIZE CHART

NOTE: Chart shows bolt thread sizes and corresponding head (wrench) sizes for standard SAE and Metric Bolts.

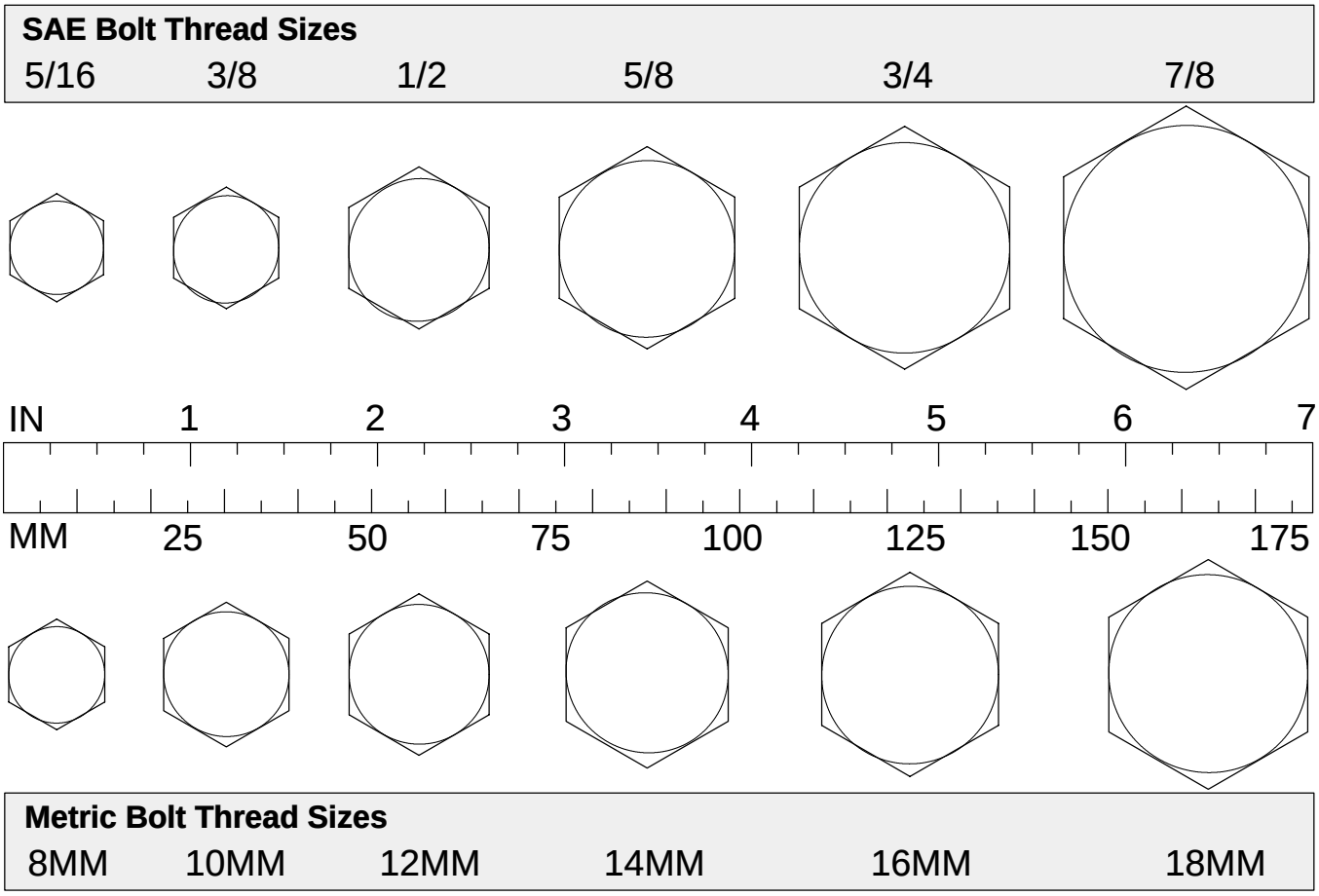

SAFETY RULES

⚠ ATTENTION! BECOME ALERT! YOUR SAFETY IS INVOLVED! ⚠

Safety is a primary concern in the design and manufacture of our products. Unfortunately, our efforts to provide safe equipment can be wiped out by an operator's single careless act.

In addition to the design and configuration of equipment, hazard control and accident prevention are dependent upon the awareness, concern, judgement, and proper training of personnel involved in the operation, transport, maintenance and storage of equipment.

It has been said "The best safety device is an informed, careful operator." We ask you to be that kind of operator.

TRAINING

■ **Safety instructions are important! Read all attachment and power unit manuals; follow all safety rules and safety decal information. (Replacement manuals are available from dealer or, in the United States and Canada, call 1-800-319-6637.) Failure to follow instructions or safety rules can result in serious injury or death.**

■ **If you do not understand any part of this manual and need assistance, see your dealer.**

■ **Operators must be instructed in and be capable of the safe operation of the equipment, its attachments and all controls. Do not allow anyone to operate this equipment without proper instructions.**

■ **Never allow children or untrained persons to operate equipment.**

PREPARATION

■ **Check that all hardware is properly installed. Always tighten to torque chart specifications unless instructed otherwise in this manual.**

■ **Always wear relatively tight and belted clothing to avoid entanglement in moving parts. Wear sturdy, rough-soled work shoes and protective equipment for eyes, hair, hands, hearing and head.**

■ **Make sure implement is properly attached, adjusted and in good operating condition.**

■ **Power unit must be equipped with ROPS or ROPS CAB and seat belt. Keep seat belt securely fastened. Falling off power unit can result in death from being run over or crushed. Keep foldable ROPS systems in "locked up" position at all times.**

■ **Make sure all safety decals are installed. Replace if damaged. (See Safety Decals section for location.)**

■ **Make sure shields and guards are properly installed and in good condition. Replace if damaged.**

■ **A minimum 20% of tractor and equipment weight must be on tractor front wheels with attachments in transport position. Without this weight, tractor could tip over causing personal injury or death. The weight may be attained with a loader, front wheel weights, ballast in tires or front tractor weights. Weigh the tractor and equipment. Do not estimate.**

OPERATIONAL SAFETY

■ **Keep bystanders away from equipment.**

■ **Do not operate equipment while under the influence of alcohol or drugs.**

■ **Operate only in daylight or good artificial light.**

■ **Keep hands, feet, hair and clothing away from equipment while engine is running. Stay clear of all moving parts.**

■ **Always comply with all state and local lighting and marking requirements.**

■ **Never allow riders on power unit or attachment.**

■ **Power unit must be equipped with ROPS or ROPS CAB and seat belt. Keep seat belt securely fastened. Falling off power unit can result in death from being run over or crushed. Keep foldable ROPS systems in "locked up" position at all times.**

■ **Always sit in tractor seat when operating controls or starting engine. Securely fasten seat belt, place transmission in neutral, engage brake and ensure all other controls are disengaged before starting tractor engine.**

■ **Look down and to the rear and make sure area is clear before operating in reverse.**

■ **Use extreme care when working close to fences, ditches, other obstructions, or on hillsides.**

■ **Before dismounting tractor or performing any service or maintenance, disengage power to implement, lower the 3-point hitch and all raised components to the ground, operate valve levers to release any hydraulic pressure, set parking brake, stop engine, remove key, and unfasten seat belt.**

■ **Do not operate on steep slopes.**

■ **Do not stop, start or change directions suddenly on slopes.**

SAFETY RULES

⚠ ATTENTION! BECOME ALERT! YOUR SAFETY IS INVOLVED! ⚠

■ **Use extreme care and reduce ground speed on slopes and rough terrain.**

■ **Watch for hidden hazards on the terrain during operation.**

■ **Stop tractor and implement immediately upon striking an obstruction. Turn off engine, remove key, inspect and repair any damage before resuming operation.**

■ **Before dismounting tractor or performing any service or maintenance, disengage power to implement, lower the 3-point hitch and all raised components to the ground, operate valve levers to release any hydraulic pressure, set parking brake, stop engine, remove key, and unfasten seat belt.**

■ **Never go underneath equipment lowered to the ground or raised. Never place any part of the body underneath equipment or between moveable parts even when the engine has been turned off. Hydraulic system leak down, hydraulic system failures, mechanical failures or movement of control levers can cause equipment to drop or rotate unexpectedly and cause severe injury or death.**

- **Service work does not require going underneath.**
- **Read operator's manual for service instructions or have done by a qualified dealer.**

MAINTENANCE SAFETY

■ **Always wear relatively tight and belted clothing to avoid entanglement in moving parts. Wear sturdy, rough-soled work shoes and protective equipment for eyes, hair, hands, hearing and head.**

■ **Never go underneath equipment lowered to the ground or raised. Never place any part of the body underneath equipment or between moveable parts even when the engine has been turned off. Hydraulic system leak down, hydraulic system failures, mechanical failures or movement of control levers can cause equipment to drop or rotate unexpectedly and cause severe injury or death.**

- **Service work does not require going underneath.**
- **Read operator's manual for service instructions or have done by a qualified dealer.**

■ **Make sure implement is properly attached, adjusted and in good operating condition.**

■ **Keep all persons away from operator control area while performing adjustments, service or maintenance.**

■ **Tighten all bolts, nuts and screws to torque chart specifications. Check that all cotter pins are installed securely to ensure equipment is in a safe condition before operating.**

■ **Make sure all safety decals are installed. Replace if damaged. (See Safety Decals section for location.)**

■ **Make sure shields and guards are properly installed and in good condition. Replace if damaged.**

STORAGE

■ **Block equipment securely for storage.**

■ **Keep children and bystanders away from storage area.**

NOTES

SAFETY DECALS

ATTENTION! BECOME ALERT! YOUR SAFETY IS INVOLVED!

Replace Immediately If Damaged!

CORE AERATOR SHOWN
STR & TR SIMILAR

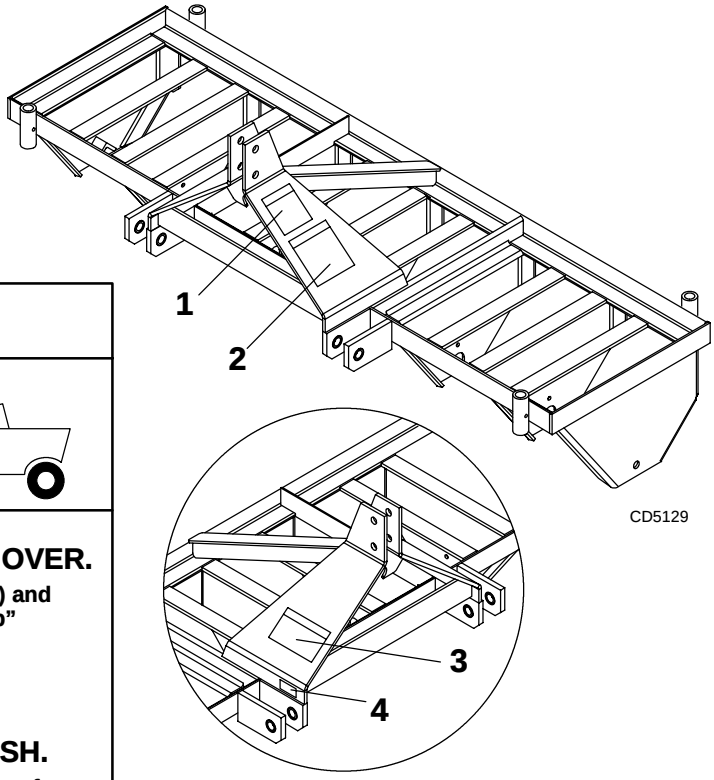

WARNING

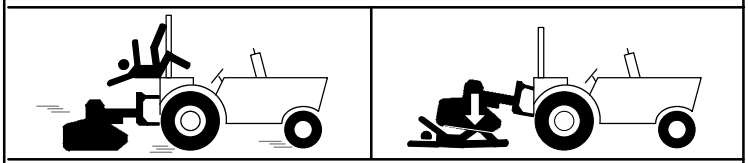

FALLING OFF CAN RESULT IN BEING RUN OVER.

- Tractor must be equipped with ROPS (or ROPS CAB) and seat belt. Keep foldable ROPS systems in "locked up" position at all times.
- Buckle Up! Keep seat belt securely fastened.
- Allow no riders.

RAISED IMPLEMENT CAN DROP AND CRUSH.

- Never go underneath raised implement which can drop from equipment or tractor 3-point hitch hydraulic leak down, hydraulic system failures, movement of control levers or mechanical linkage failures.
- Service work does not require going underneath implement. Read manual instructions.

FALLING OFF OR GOING UNDERNEATH IMPLEMENT CAN RESULT IN SERIOUS INJURY OR DEATH. 55121–B

2 – PN 55121

1 – PN 55122

WARNING

TO AVOID SERIOUS INJURY OR DEATH:

- Read Operator's Manual before operating, servicing or repairing equipment. Follow all safety rules and instructions. (Manuals are available from dealer or, in the United States and Canada, call 1-800-319-6637.)
- Operate from tractor seat only.
- Lower equipment to ground, stop engine, remove key and set brake before dismounting tractor.
- Allow no children or untrained persons to operate equipment.

FAILURE TO FOLLOW THESE INSTRUCTIONS CAN RESULT IN INJURY OR DEATH. 55122–B

3 – PN 57500 (PL Only)

WARNING

WHEN CONNECTING AND STORING EQUIPMENT

- Follow all manual instructions and safety rules.
- Properly connect to tractor before raising park stands or adding ballast weight.
- Remove ballast weight before disconnecting equipment from tractor.
- Lower and properly secure all four park stands before disconnecting equipment from tractor.
- Park stands must be functional, kept in good repair, and stored on unit.
- Park and store on hard level ground away from people and children.

FAILURE TO FOLLOW INSTRUCTIONS CAN RESULT IN INJURY OR DEATH. 57500

4 – Serial Number Plate

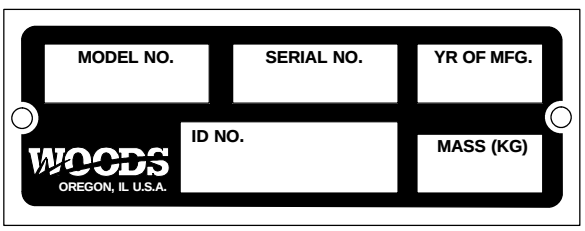

(Rev. 1/18/2000)

PN-51707 (5/96)

BOLT TORQUE CHART

Always tighten hardware to these values unless a different torque value or tightening procedure is listed for a specific application.

Fasteners must always be replaced with the same grade as specified in the manual parts list.

Always use the proper tool for tightening hardware: SAE for SAE hardware and Metric for metric hardware.

Make sure fastener threads are clean and you start thread engagement properly.

All torque values are given to specifications used on hardware defined by SAE J1701 & J1701M JUL96.

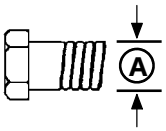

SAE SERIES TORQUE CHART

SAE Bolt Head Identification

SAE Grade 2 (No Dashes) | **SAE Grade 5 (3 Radial Dashes)** | **SAE Grade 8 (6 Radial Dashes)**

A Diameter (Inches)	Wrench Size	MARKING ON HEAD					
		SAE 2		**SAE 5**		**SAE 8**	
		Lbs.-Ft.	N-m	Lbs.-Ft.	N-m	Lbs.-Ft.	N-m
1/4	7/16”	6	8	10	13	14	18
5/16	1/2”	12	17	19	26	27	37
3/8	9/16”	23	31	35	47	49	67
7/16	5/8”	36	48	55	75	78	106
1/2	3/4”	55	75	85	115	120	163
9/16	13/16”	78	106	121	164	171	232
5/8	15/16”	110	149	170	230	240	325
3/4	1-1/8”	192	261	297	403	420	569
7/8	1-5/16”	306	416	474	642	669	907
1	1-1/2”	467	634	722	979	1020	1383

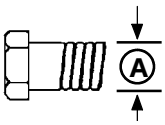

METRIC SERIES TORQUE CHART

Metric Grade 8.8

Metric Bolt Head Identification

Metric Grade 10.9

Diameter & Thread Pitch (Millimeters) A	Wrench Size	COARSE THREAD				FINE THREAD				Diameter & Thread Pitch (Millimeters) A
		MARKING ON HEAD				MARKING ON HEAD				
		Metric 8.8		**Metric 10.9**		**Metric 8.8**		**Metric 10.9**		
		N-m	Lbs.-Ft.	N-m	Lbs.-Ft.	N-m	Lbs.-Ft.	N-m	Lbs.-Ft.	
6 x 1.0	10 mm	8	6	11	8	8	6	11	8	6 x 1.0
8 x 1.25	13 mm	20	15	27	20	21	16	29	22	8 x 1.0
10 x 1.5	16 mm	39	29	54	40	41	30	57	42	10 x 1.25
12 x 1.75	18 mm	68	50	94	70	75	55	103	76	12 x 1.25
14 x 2.0	21 mm	109	80	151	111	118	87	163	120	14 x 1.5
16 x 2.0	24 mm	169	125	234	173	181	133	250	184	16 x 1.5
18 x 2.5	27 mm	234	172	323	239	263	194	363	268	18 x 1.5
20 x 2.5	30 mm	330	244	457	337	367	270	507	374	20 x 1.5
22 x 2.5	34 mm	451	332	623	460	495	365	684	505	22 x 1.5
24 x 3.0	36 mm	571	421	790	583	623	459	861	635	24 x 2.0
30 x 3.0	46 mm	1175	867	1626	1199	1258	928	1740	1283	30 x 2.0

Typical Washer Installations

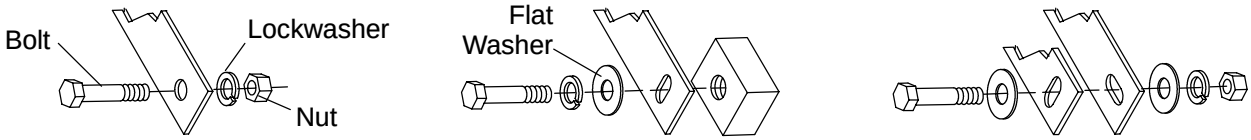

OPERATION

Safety is a primary concern in the design and manufacture of our products. Unfortunately, our efforts to provide safe equipment can be wiped out by an operator's single careless act.

In addition to the design and configuration of equipment, hazard control and accident prevention are dependent upon the awareness, concern, judgement, and proper training of personnel involved in the operation, transport, maintenance and storage of equipment.

It has been said "The best safety device is an informed, careful operator." We ask you to be that kind of operator.

The designed and tested safety of this machine depends on it being operated within the limitations as explained in this manual. Be familiar with and follow all safety rules in the manual, on the renovator and on the tractor.

The safe operation of this renovator is the responsibility of the operator, who must be properly trained. The operator should be familiar with the equipment and all safety practices before starting operation. Read the Safety Rules and Safety Decals on pages 4 through 6.

The Turf Renovator (Model **TR72**) is an excellent turf reconditioning tool that penetrates the ground in order to promote turf root health by allowing water, air and sunlight to enter the root system. With the available seedbox, the Turf Renovator (Model **TR72S**) becomes a useful tool for overseeding applications.

The Super Turf Renovator (Models **STR48S, STR60S and STR72S**) is also an excellent turf reconditioning tool that penetrates the ground in order to promote turf root health by allowing water, air and sunlight to enter the root system. The front rollers can be angled (crabbed) to promote a more aggressive tearing action of the turf.

The Core Aerator (Models **PL48, PL60 and PL72**) is designed to lower the soil compaction of turf areas by removing plugs of soil. The holes eventually fill in with the surrounding soil, making for a less compact environment for the turf root system.

Recommended tractor ground speed is from 2 to 5 mph.

⚠ WARNING

■ **Never allow children or untrained persons to operate equipment.**

■ **Power unit must be equipped with ROPS or ROPS CAB and seat belt. Keep seat belt securely fastened. Falling off power unit can result in death from being run over or crushed. Keep foldable ROPS systems in "locked up" position at all times.**

⚠ WARNING

■ **Keep bystanders away from equipment.**

■ **Keep all persons away from operator control area while performing adjustments, service or maintenance.**

■ **Never go underneath equipment lowered to the ground or raised. Never place any part of the body underneath equipment or between moveable parts even when the engine has been turned off. Hydraulic system leak down, hydraulic system failures, mechanical failures or movement of control levers can cause equipment to drop or rotate unexpectedly and cause severe injury or death.**

- **Service work does not require going underneath.**
- **Read operator's manual for service instructions or have done by a qualified dealer.**

■ **Keep hands, feet, hair and clothing away from equipment while engine is running. Stay clear of all moving parts.**

⚠ CAUTION

■ **Always wear relatively tight and belted clothing to avoid entanglement in moving parts. Wear sturdy, rough-soled work shoes and protective equipment for eyes, hair, hands, hearing and head.**

■ **Stop tractor and implement immediately upon striking an obstruction. Turn off engine, remove key, inspect and repair any damage before resuming operation.**

TURF RENOVATOR ROLLER OPERATION – TR72S

The front roller on the Turf Renovator is non-angling. When operated, the large front roller pins penetrate and loosen the soil prior to seeding or overseeding.

The rear roller's function is to firm and press the soil kicked up by the front roller into a uniform seedbed with the loose soil needed to insure proper seed germination. The spring tension on the rear roller can be adjusted to deliver the desired down pressure and roller action to achieve the desired seedbed appearance.

For best results, the Turf Renovator should be adjusted level front to back so that the front and rear rollers work together. Fore and aft adjustment is controlled by adjusting the tractor's top link length.

In extremely compacted soil conditions, additional weight should be added to the Turf Renovator to help the roller pins penetrate the soil sufficiently.

When the situation permits, making a second pass 90° to the first is an effective way for the roller pins to penetrate areas where uneven soil conditions exist.

SUPER TURF RENOVATOR ROLLER OPERATION – STR48S, STR60S & STR72S (Figure 1 & Figure 2)

The front roller on the Super Turf Renovator can be angled (crabbed) to a desired position. When the renovator is pulled in a straight forward position, the large front pins will penetrate the soil in a straight pushing action and little disturbance is caused to the turf. The penetration of the soil provides a means for air, sunlight and water to get to the turf root system. The more the angle (crab), the more tearing action is applied by the front roller pins. For severe turf conditions, a maximum crab position may be desired.

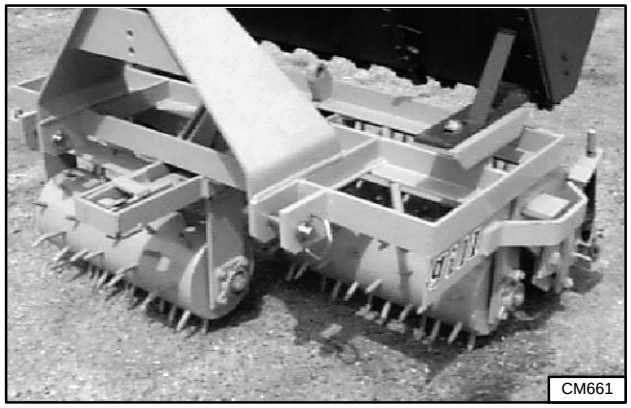

Figure 1. Straight Roller Position

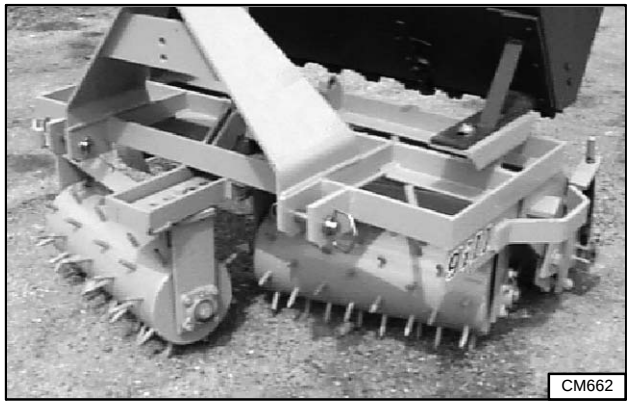

Figure 2. Angled Roller Position

The rear roller's function is to firm and press soil kicked up by the front roller into a uniform seedbed with the loose soil needed to insure proper seed germination. The spring tension on the rear roller can be adjusted to deliver the desired down pressure and roller action to achieve the desired seedbed appearance.

For best results, the Super Turf Renovator should be adjusted level front to back so that the front and rear rollers work together. Fore and aft adjustment is controlled by adjusting the tractor's top link length.

In extremely compacted soil conditions, additional weight should be added to the Super Turf Renovator to help the roller pins penetrate the turf and soil sufficiently.

When the situation permits, making a second pass 90° to the first is an effective way for the roller pins to penetrate areas where uneven soil conditions exist.

CORE AERATOR OPERATION

The Core Aerator is designed to reduce the soil compaction of an established turf area. The case-hardened spoons attached to the reels penetrate and remove a 3/4 x 4" plug from the soil. Up to 1000 lbs. of additional weight can be added to the frame to ensure the proper penetration by the spoons.

TRACTOR ATTACHMENT

(Figure 3 & Figure 4)

The Turf Renovator, Super Turf Renovator and the Core Aerator are designed for use on Category I, 3-point tractors with a minimum lift capacity of 500 lbs. Attach the tractor's lower lift arms to the renovator and secure with mounting pins (24) and lynch pins (25).

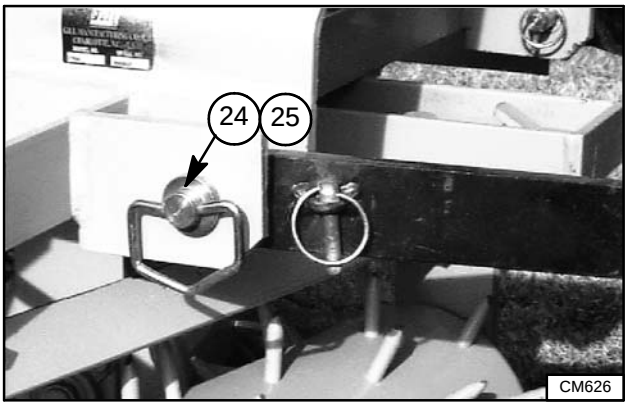

24. Pin
25. Lynch pin

Figure 3. Attaching to Tractor Lower Lift Arms

Attach the tractor's top link to the upper mast of the renovator and secure with the high-strength top link pin provided with top link. Adjust top link as needed to level the renovator fore and aft. Adjust the lower lift arm anti-sway device to prevent the renovator from excessive side to side movement.

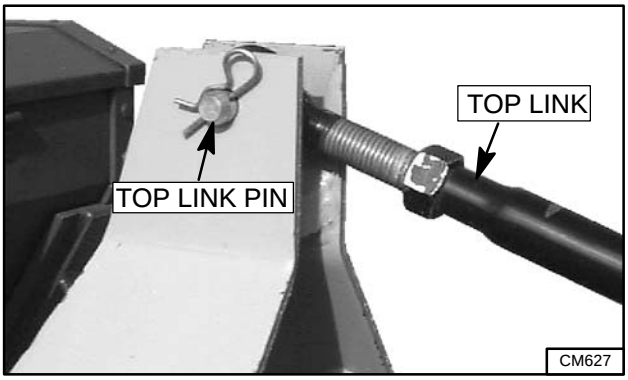

Figure 4. Attaching Tractor Top Link

FRONT ROLLER ADJUSTMENT – STR48S, STR60S & STR72S

(Figure 5 & Figure 6)

To adjust the front roller angle, remove the roller arm locking mechanism (26).

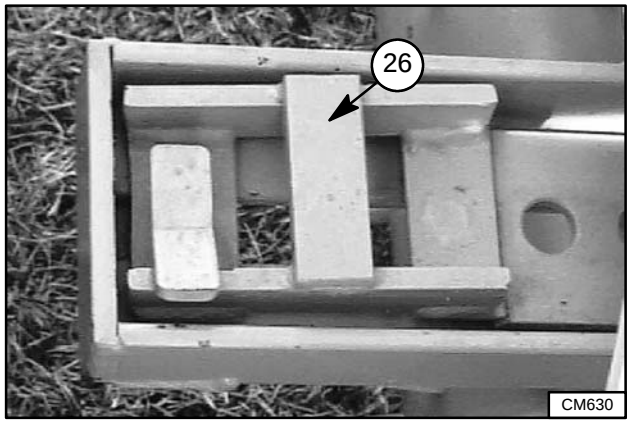

26. Lock assembly

Figure 5. Front Roller Adjustment

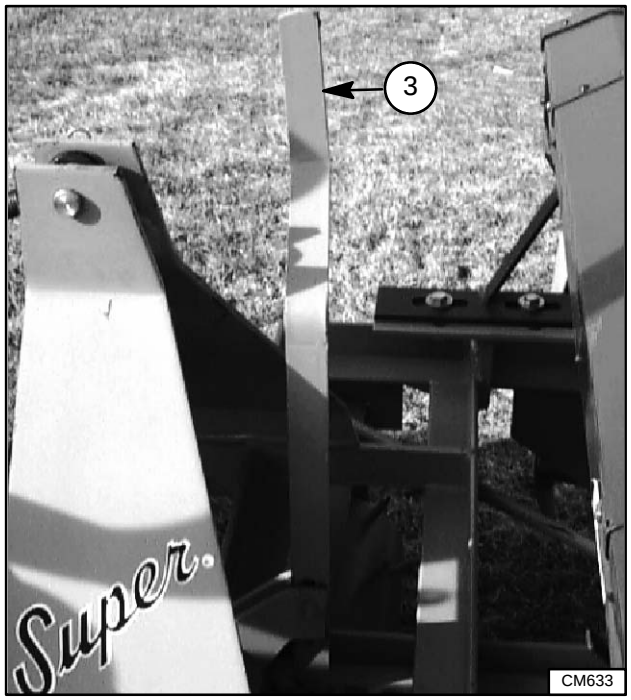

Figure 6. Front Roller Adjustment Handle

Use the adjustment handle to shift the front rollers into the desired position. It may be necessary to lift the handle upward in order to pin the end of the lever into a different hole to assist in the movement of the front rollers. Once the front rollers are positioned as desired, reinstall the locking mechanism into the appropriate hole and secure with the safety pin previously removed.

With the renovator attached, it is important to check the front end stability of the tractor before placing the equipment into service.

⚠ WARNING

■ **A minimum 20% of tractor and equipment weight must be on tractor front wheels with attachments in transport position. Without this weight, tractor could tip over causing personal injury or death. The weight may be attained with a loader, front wheel weights, ballast in tires or front tractor weights. Weigh the tractor and equipment. Do not estimate.**

PRE-OPERATION CHECK LIST

(OWNER'S RESPONSIBILITY)

— Review and follow all safety rules and safety decal instructions on pages 4 through 6.

— Check that all safety decals are installed and in good condition. Replace if damaged.

— Check that all shields are properly installed and in good condition. Replace if damaged.

— Check that all hardware is properly installed and secured.

— Check that equipment is properly and securely attached to tractor.

— Do not allow riders.

— Check all lubrication points and grease as instructed in "Service, lubrication information".

— Make sure tractor ROPS or ROPS CAB and seat belt are in good condition. Keep seat belt securely fastened during operation.

COMMENCING OPERATION

The power for operating the renovator is developed through the weight of the equipment and the ground contact between the renovator rollers and the turf. Know how to stop the tractor and renovator quickly in an emergency. Survey the area to be worked and remove any obstructions that may affect the performance of the equipment.

SEEDING OPERATION – TR72S, STR48S, STR60S & STR72S

Tractor speed and seed flow settings are critical for proper seed population. Check the seed control chart, Figure 8, on the inside of the seedbox lid and adjust the flow control lever, Figure 7, as needed for the seed being used and the population desired.

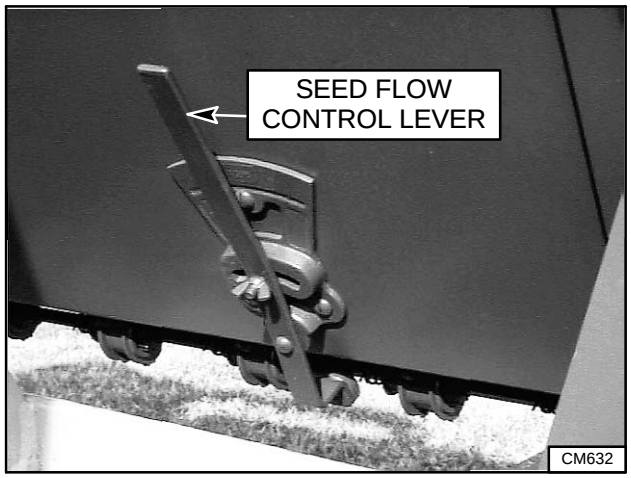

Figure 7. Seed Flow Control Lever

Tractor speed (normally 2–5 mph) should be established to where uniform seed incorporation occurs with the action of the rollers.

The seedbox has a seed control and distribution chart on the inside of the lid. The chart is based on a 1:1 chain drive ratio. Any adjustments to this ratio will result in a change to the flow rate as described in the chart.

Before seeding an area, check the attitude of the seeder and adjust the top link so that the front and rear rollers are level. Adjust the 3-point lower lift stop so that the roller spikes penetrate the ground at 3/4", or enough to remove the tracks left by the tractor tires.

For new seeding, the soil should be first prepared and leveled with the renovator so that the proper seedbed is created. Use of other equipment may create an irregular seedbed. When the renovator's rollers hit the soil unevenly, soil compression is irregular. This causes the seeds to be placed in low spots and irregular germination may be experienced.

OPERATING TIPS

Do not allow a buildup of dirt on the roller sprockets. Clean sprockets and chain as needed. Excessive buildup of material can cause damage to the roller and idler shafts.

Always run the drive chain with some slack in the chain. An extremely tight chain can damage the roller shaft, the roller bearings, and the idler shaft and bearing.

SEED CONTROL CHART

	HIGHLAND BENT		UNHULLED DOMESTIC BERMUDA		KENTUCKY BLUE		CHEWINGS FESCUE		KENTUCKY 31 FESCUE		CREEPING RED FESCUE		ITALIAN RYE	
Setting	1000 Sq. Ft.	Acre	1000 Sq. Ft.	Acre	1000 Sq. Ft.	Acre	1000 Sq. Ft.	Acre	1000 Sq. Ft.	Acre	1000 Sq. Ft.	Acre	1000 Sq. Ft.	Acre
1/4 Open	1-1/2 Lb.	66 Lb.	3 Lb.	132 Lb.	1 Lb.	44 Lb.	18-1/2 Oz.	51 Lb.	3/4 Lb.	33 Lb.	1/2 Lb.	22 Lb.	1-1/2 Lb.	66 Lb.
1/2 Open	4-1/4 Lb.	187 Lb.	5 Lb.	220 Lb.	2-1/2 Lb.	110 Lb.	2 Lb.	88 Lb.	2-3/4 Lb.	121 Lb.	1-1/2 Lb.	66 Lb.	2-1/2 Lb.	110 Lb.
3/4 Open	6-1/4 Lb.	275 Lb.	7-3/4 Lb.	341 Lb.	3-3/4 Lb.	165 Lb.	2-1/2 Lb.	110 Lb.	3-1/2 Lb.	154 Lb.	2-1/4 Lb.	99 Lb.	3-1/2 Lb.	154 Lb.
Full Open	9 Lb.	396 Lb.	10-1/4 Lb.	451 Lb.	5-1/2 Lb.	242 Lb.	3-1/4 Lb.	143 Lb.	5 Lb.	220 Lb.	3 Lb.	132 Lb.	5 lb.	220 Lb.

Figure 8. Seed Control Chart

OWNER SERVICE

Safety is a primary concern in the design and manufacture of our products. Unfortunately, our efforts to provide safe equipment can be wiped out by a single careless act of an operator.

In addition to the design and configuration of equipment, hazard control and accident prevention are dependent upon the awareness, concern, prudence and proper training of personnel involved in the operation, transport, maintenance and storage of equipment.

It has been said *"The best safety device is an informed, careful operator."* We ask you to be that kind of an operator.

The information in this section is written for operators who possess basic mechanical skills. Should you need help, your dealer has trained service technicians available. For your protection, read and follow all safety information in this manual.

CAUTION

■ **Always wear relatively tight and belted clothing to avoid entanglement in moving parts. Wear sturdy, rough-soled work shoes and protective equipment for eyes, hair, hands, hearing and head.**

WARNING

■ **Never go underneath equipment lowered to the ground or raised. Never place any part of the body underneath equipment or between moveable parts even when the engine has been turned off. Hydraulic system leak down, hydraulic system failures, mechanical failures or movement of control levers can cause equipment to drop or rotate unexpectedly and cause severe injury or death.**

- **Service work does not require going underneath.**
- **Read operator's manual for service instructions or have done by a qualified dealer.**

■ **Before dismounting tractor or performing any service or maintenance, disengage power to implement, lower the 3-point hitch and all raised components to the ground, operate valve levers to release any hydraulic pressure, set parking brake, stop engine, remove key, and unfasten seat belt.**

■ **Keep all persons away from operator control area while performing adjustments, service or maintenance.**

LUBRICATION (Figure 9 & Figure 10)

The following illustration shows the lubrication points on the machine and the frequency of lubrication required. One pump of a good grade multi-purpose grease should be sufficient in most cases. Harsh or dry conditions may require more frequent lubrication. Be sure to clean fittings prior to lubrication. Do not let excessive grease build up around lubrication points.

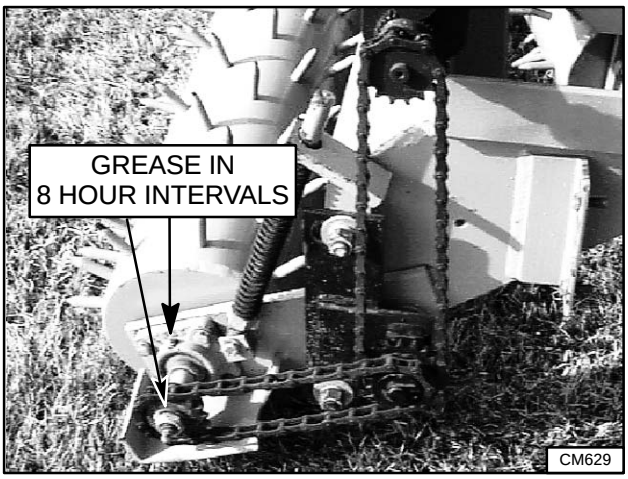

Figure 9. Renovator Lubrication

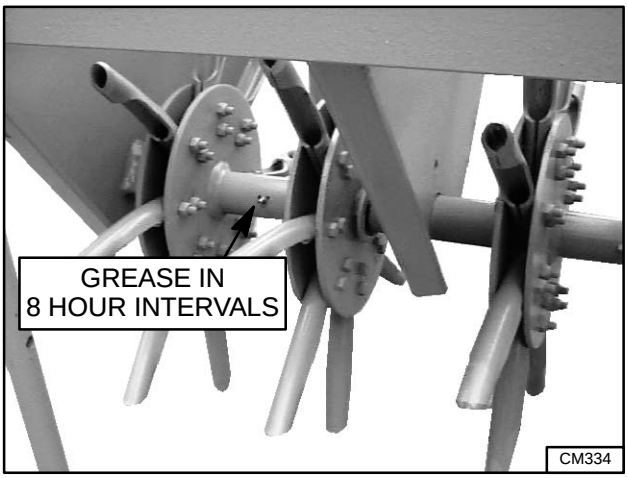

Figure 10. Core Aerator Lubrication

STORAGE – CORE AERATOR

(Figure 11 & Figure 12)

For stability during storage, the core aerator is supplied with parking stands. Raise the core aerator off ground to provide the necessary room to install parking stands. Remove clevis pin (22) from the parking stand mounting tube and lower stand to storage position. Reinstall clevis pin. Repeat for remaining three stands. Lower equipment to ground and disconnect from tractor. Carefully drive tractor away from core aerator when disconnected.

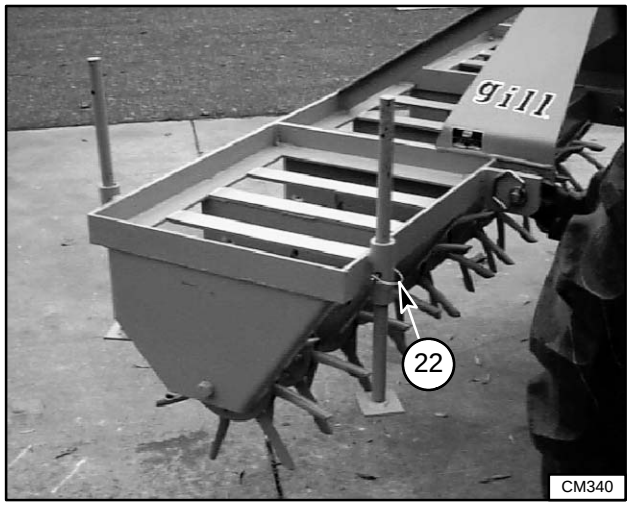

Figure 11. Core Aerator with Parking Stands Raised

Figure 12. Core Aerator in Storage Position

NOTES

ASSEMBLY

ASSEMBLY INSTRUCTIONS

Assembly of this equipment is the responsibility of the GILL dealer. It should be delivered to the owner completely assembled, lubricated, and adjusted for normal operating conditions. Complete the check lists on page 15 when it is set up.

In most cases, the Gill Turf Renovator, Super Turf Renovator and Core Aerator are shipped completely assembled from the factory. The seed box is an option that can be added to the Turf Renovator and Super Turf Renovator at a later time if desired.

SEEDBOX INSTALLATION

Mount the seedbox on top of renovator mounting saddles and secure with cap screws (60) and flat washers (76). Do not tighten fasteners until all adjustments are complete.

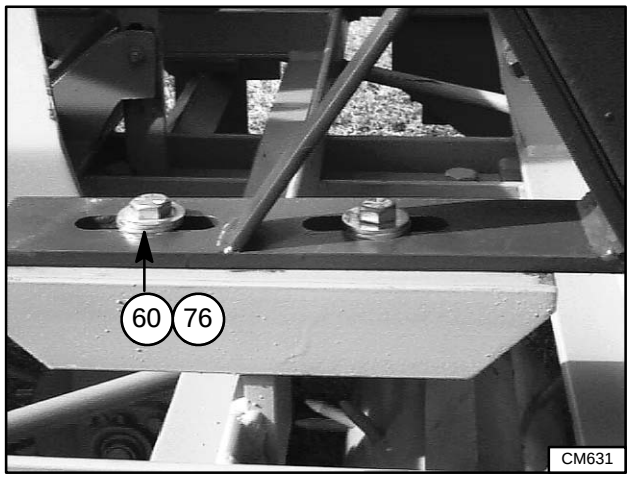

60. 1/2 – 13 x 1-1/2 Hex head cap screw
76. 1/2 Flat washer plain

Figure 13. Seedbox Installation

Place a 3/4” flat washer (86), 18T sprocket (56), 3/4” flat washer (86), and 3/4” hex locknut (87) on the rear roller drive axle. When properly torqued, the hex locknut provides the means required to drive the seedbox roller chain. Backing the hex locknut off a quarter of a turn will disengage the chain to the seedbox.

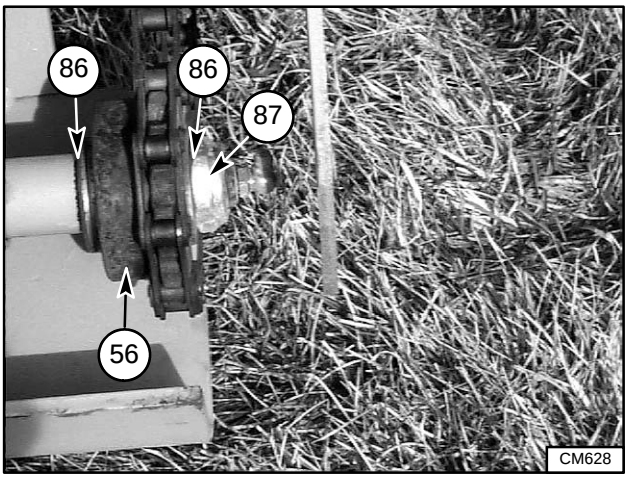

Figure 14. Seedbox Installation

Remove the two hex nuts (17) and lockwashers (53) from the cap screws securing the spring bracket (20) to the renovator. Place idler assembly (50) over cap screws as shown in Figure 15. Install the 28 link roller chain (49) on the seedbox sprocket and the large sprocket on the idler assembly. Install the 27-1/2 link roller chain (23) on the rear roller sprocket (56) and the small idler sprocket. Loosely secure the idler assembly to the spring bracket with the lockwashers and hex nuts previously removed. Slide the idler assembly forward to properly tension the upper drive chain. **NOTE: Do not tighten chain excessively. Allow some slack in chain.** Tighten the fasteners securing the idler assembly to the spring bracket. Tighten the fasteners securing the seedbox to the renovator frame.

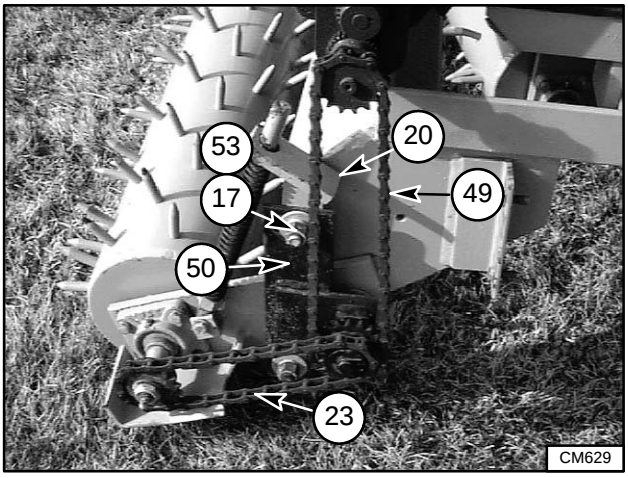

Figure 15. Chain Installation

PRE-DELIVERY CHECK LIST

(DEALER'S RESPONSIBILITY)

Inspect the renovator thoroughly to be certain it is set up properly before delivering it to the customer. The following check list is a reminder of points to inspect. Check off each item as it is found satisfactory or after proper adjustment is made.

— Check that all safety decals are installed and in good condition. Replace if damaged.

— Check that shields and guards are properly installed and in good condition. Replace if damaged.

— Check all bolts to be sure they are tight.

— Check that all cotter pins and safety pins are properly installed.

— Check and grease all lubrication points as identified in the "Service, lubrication information".

DELIVERY CHECK LIST

(DEALER'S RESPONSIBILITY)

— Show customer how to make adjustments.

— Present Operator's Manual and request that customer and all operators read it before operating equipment.

— Point out all guards and shields. Explain their importance and the safety hazards that exist when not kept in place and in good condition.

— Instruct customer how to lubricate and explain importance of lubrication.

— Explain to customer the potential crushing hazards of going underneath raised equipment. instruct customer that service work does not require going underneath unit and never to do so.

NOTES

STR48S, STR60S & STR72S Super Turf Renovators TR72 & TR72S Turf Renovators Recommended Stocking List

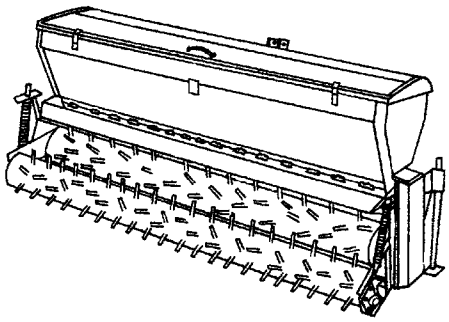

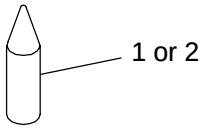

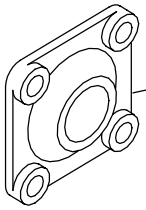

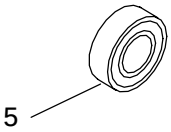

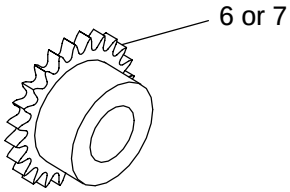

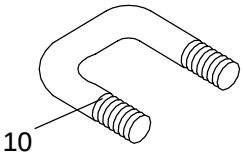

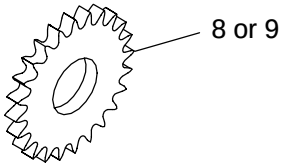

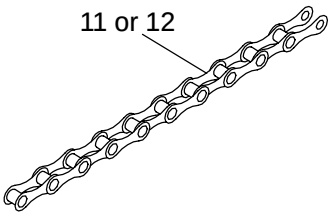

REF NO	PART NO	STOCK QTY	DESCRIPTION
1	20A904	25	9/16 Oversized replacement pin
2	SU115	25	7/16 Oversized replacement pin (TR Series only)
3	20A920	2	Bearing – 1” w/housing
4	SU121	2	Bearing – 3/4” w/housing (TR Series only)
5	20A650	3	Sealed bearing (STR Series only)
6	20A653	1	Spur gear agitator shaft – 28T (STR Series only)
7	20A654	1	Spur gear feed shaft – 30T (STR Series only)
8	20A656	1	Sprocket – 15T (STR Series only)
9	SU637	1	40B18 Sprocket 18T with 1” bore (STR Series only)
10	20A108	10	U-Bolt zinc with fasteners (STR Series only)
11	20A806	1	Drive chain – 13 link (STR Series only)
12	SU625	1	Drive chain – 15 link (STR Series only)
13	FA419	2	Double pitch connect link (STR Series only)
14	SU631	2	7/8 Needle bearing (STR Series only)
15	12701CS6	1	Spray paint – burnt orange Case of 6
16	72670CS6	1	Spray paint – black Case of 6
17	51707	1	STR & TR Turf Renovator Operator’s Manual

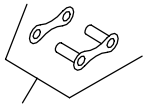

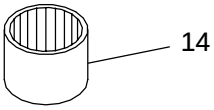

CD5298

(Rev. 11/13/98)
PN-51707 (5/96)

INDEX TO PARTS LISTS

TR & STR
RECOMMENDED DEALER STOCKING LIST 16

TURF RENOVATOR 18

SUPER TURF RENOVATOR 19

SEEDBOX 20–21

CORE AERATOR 22

TURF RENOVATOR

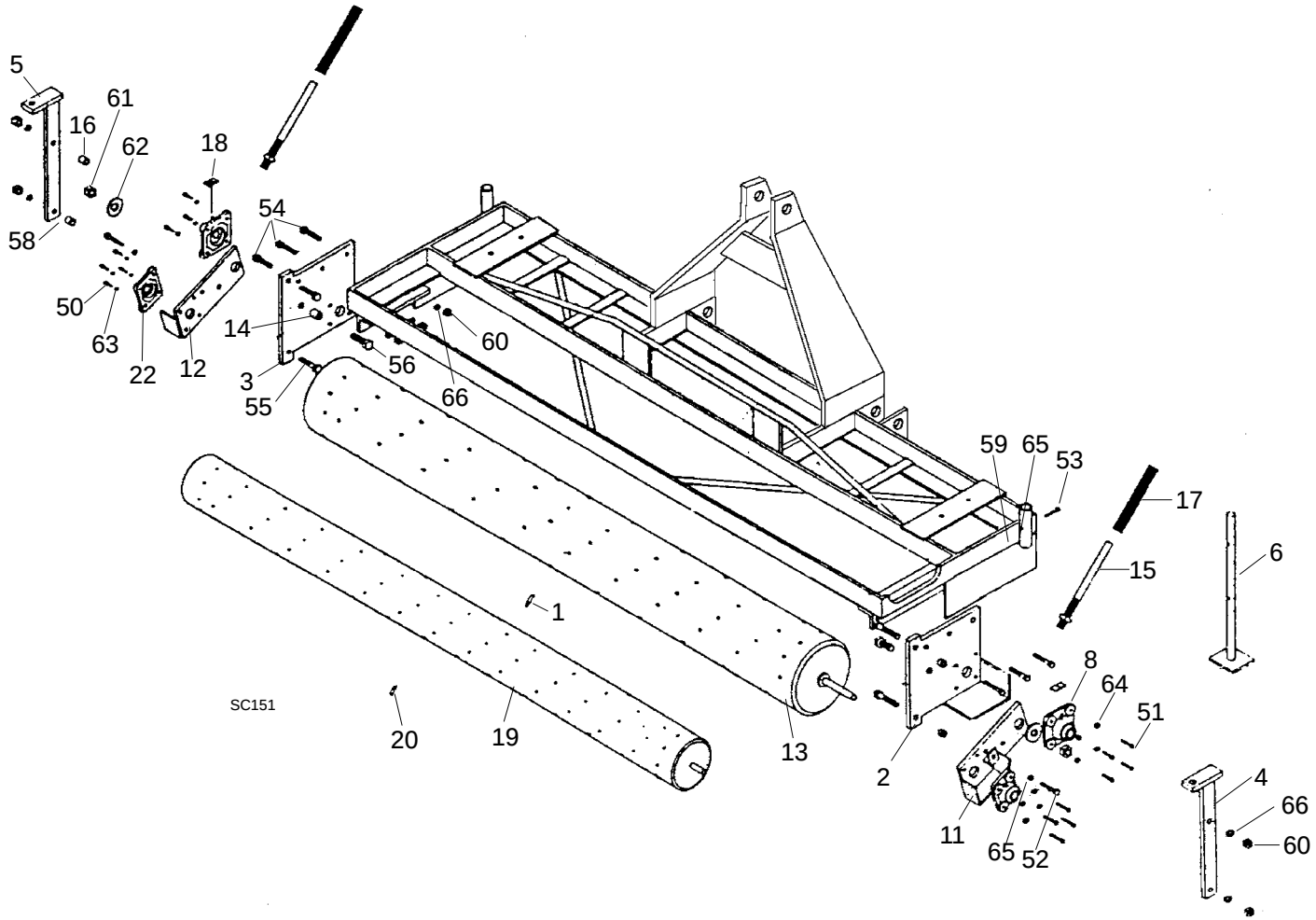

Ref No	Part No	No Used	Description
1	20A904	199	9/16 Oversized replacement pin
2	20A905	1	Endplate (RH)
3	20A910	1	Endplate (LH)
4	20A913	1	Spring bracket (RH)
5	20A914	1	Spring bracket (LH)
6	20A917	2	Stand assembly
7	20A918	1	Positioning pin
8	20A920	2	1” Bearing with housing
10	20A922	1	Bearing cover with out hole
11	20A923	1	3/4 Roller arm assembly (RH)
12	20A924	1	3/4 Roller arm assembly (LH)
13	20A927	1	8” Roller assembly 1” short – 70”
14	20A106	2	Roller arm bushing
15	20A111	2	Spring stud (long)
16	20A112	4	Spring bracket spacer
17	20A125	2	Spring (long)
18	20A149	4	Felt shield
19	20A217	1	5” Roller assembly 3/4” S/S
20	SU115	105	7/16 Oversized replacement pin
22	SU121	2	3/4 Bearing with housing

HARDWARE

Ref No	Part No		Description
50	14562	*	5/16 NC x 1 Hex head cap screw GR5
51	839	*	3/8 NC x 1 Hex head cap screw GR5
52	920	*	3/8 NC x 1-3/4 Hex head cap screw GR5
53	FA112		3/8–24 x 2 Hex head cap screw plated
54	24576		1/2 NC x 1-3/4 Hex head cap screw GR5
55	639	*	1/2 NC x 2-1/2 Hex head cap screw GR5
56	735	*	3/4 NC x 2 Hex head cap screw GR5
59	1271	*	3/8 NF Hex nut
60	1093		1/2 NC Hex nut plated
61	1450	*	3/4 NC Hex nut plated
62	1257	*	3/4 Flat washer plated
63	2472	*	5/16 Lockwasher zinc plated
64	838	*	3/8 Lockwasher zinc plated
65	838	*	3/8 Lockwasher zinc plated
66	855	*	1/2 Lockwasher zinc plated

* Obtain Locally

N/S – Not Serviceable

SUPER TURF RENOVATOR

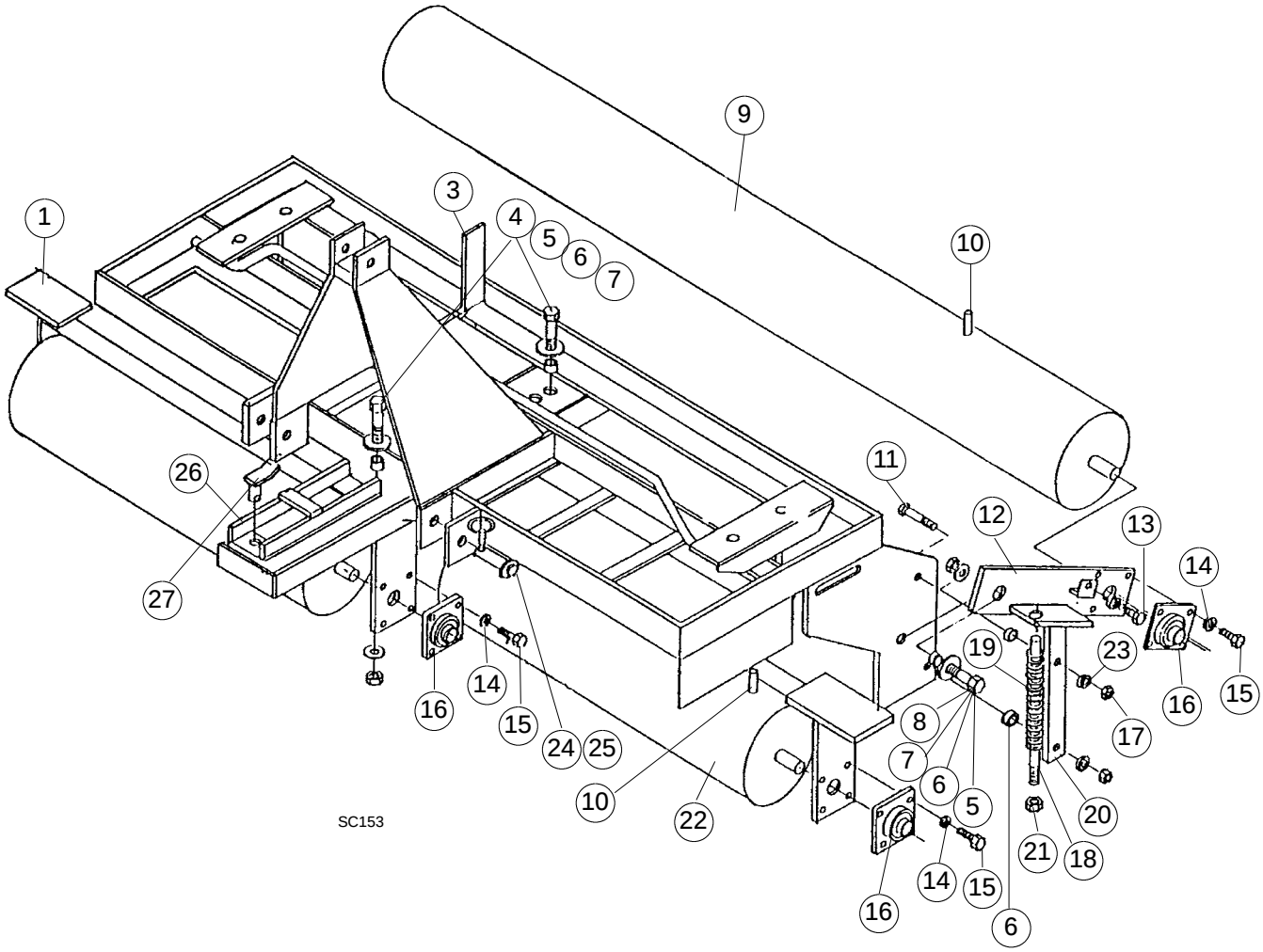

Ref No	Part No	No Used	Description
1	SU908	2	Roller retainer
3	SU905	1	Handle
4	FA456	2	Hex head cap screw
5	FA307	6	3/4 USS Flat washer plain
6	FA447	5	Hex nut
7	20A108	4	U-Bolt zinc (with fasteners)
8	FA127	2	Hex head screw
9	SU920	1	8” Rear roller 1” L/S **(STR72)**
	-or-		**-or-**
9	53280	1	8” Rear roller **(STR48)** – 46-1/2”
	-or-		**-or-**
9	53281	1	8” Rear roller **(STR60)** – 59”
10	20A904	400	9/16 Oversized replacement pin
11	FA115	4	1/2 – 13 x 2-1/2 Hex head cap screw
12	SU916	1	Rear roller arm (LH)
	SU915	1	Rear roller arm (RH)
13	FA109	2	3/8 – 16 x 1-3/4 Hex head cap screw

Ref No	Part No	No Used	Description
14	FA355	26	3/8 Lockwasher plain
15	FA105	24	Hex head cap screw
16	20A920	6	1” Bearing with housing
17	FA206	4	Hex nut
18	20A111	2	Spring stud (long)
19	20A125	2	Spring (long)
20	SU106	1	Spring bracket (LH)
	SU107	1	Spring bracket (RH)
21	FA211	2	3/4 – 10” Hex nut plain
22	SU922	2	34-1/4” Front Roller **(STR72)**
	-or-		**-or-**
22	53282	2	22-1/4” Front Roller **(STR48)**
	-or-		**-or-**
22	53283	2	28-1/4” Front Roller **(STR60)**
23	FA358	4	1/2 Lockwasher plain
24	SR53	2	Pin
25	FA412	3	7/16 x 1-3/4 Lynch pin
26	SU902	1	Lock assembly
27	SU903	1	Lock pin

SEEDBOX

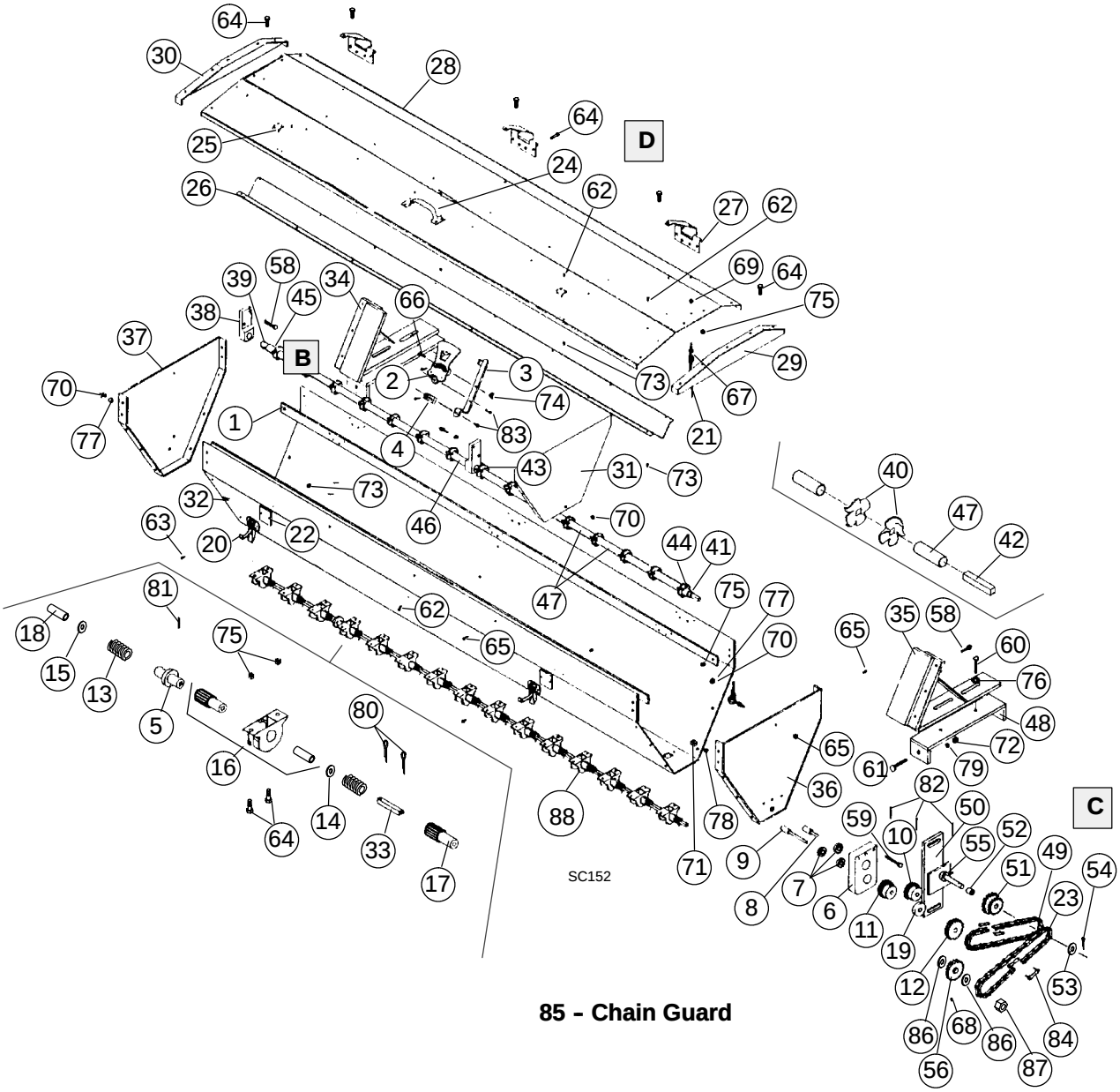

85 – Chain Guard

Ref No	Part No	No Used	Description
1	20A609	2	Flat brace **(72”)**
	-or-		**-or-**
1	53284	2	Flat brace **(48”)**
	-or-		**-or-**
1	53324	2	Flat brace **(60”)**
2	20A613	1	Seed regulator bracket
3	20A614	1	Seed regulator handle
4	20A615	1	Pivot block
5	20A624	1	Feed shaft sleeve
6	20A649A	1	Bearing block assembly
7	20A650	3	Sealed bearing
8	20A651	1	Agitator sleeve 3/8 broached hole
9	20A652	1	Feed sleeve 5/16 broached hole
10	20A653	1	Spur gear agitator shaft (28T)
11	20A654	1	Spur gear feed shaft (30T)
12	20A656	1	Sprocket (15T)
13	20A617	15	Spring
14	20A618	15	Washer, thick
15	20A619		Washer slotted (Optional shim)
16	20A670	15	Seed cup assembly complete
17	20A672	15	Splined gear
18	20A673	15	Sleeve
19	20A688	1	3/8 Sprocket spacer
20	20A694	2	Seedbox latch
21	20A695	2	Lid stop chain
22	20A696	2	Latch spacer
23	20A806	1	Drive chain (13 link)
D	57662	1	Lid assembly complete **(48”)** (includes items 24–30)
	-or-		**-or-**
D	57663	1	Lid assembly complete **(60”)** (includes items 24–30)
	-or-		**-or-**
D	SU601	1	Lid assembly complete **(72”)** (includes items 24–30)

(Rev. 1/18/2000)

SEEDBOX

Ref No	Part No	No Used	Description
24	20A635	1	Lid handle
25	20A697	2	Latch catch
26	SU602	1	Lid stiffener **(72")**
	-or-		**-or-**
26	53319	1	Lid stiffener **(48")**
	-or-		**-or-**
26	53318	1	Lid stiffener **(60")**
27	57510	3	Hinge – 4"
28	SU640	1	Lid **(72")**
	-or-		**-or-**
28	53317	1	Lid **(48")**
	-or-		**-or-**
28	53316	1	Lid **(60")**
29	SU641	1	Lid end (RH)
30	SU642	1	Lid end (LH)
31	SU603	1	Center partition
32	SU604	1	Sides and bottom **(72")**
	-or-		**-or-**
32	53314	1	Sides and bottom **(48")**
	-or-		**-or-**
32	53313	1	Sides and bottom **(60")**
33	SU606	1	Feed shaft **(72")**
	-or-		**-or-**
33	53321	1	Feed shaft **(48")**
	-or-		**-or-**
33	53320	1	Feed shaft **(60")**
34	SU607	1	Mounting bracket (LH)
35	SU608	1	Mounting bracket (RH)
36	SU609	1	Steel head (RH)
37	SU610	1	Steel head (LH)
B	SU617	--	Agitator assembly complete (Includes items 38–47) **(72")**
	-or-		**-or-**
B	53504	--	Agitator assembly complete (Includes items 38–47) **(48")**
	-or-		**-or-**
B	53505	--	Agitator assembly complete (Includes items 38–47) **(60")**
38	20A662	2	Hanging bracket
39	20A663	2	Ryertex bushing
40	20A664	30	Agitator washer
41	20A687	1	1/2 Set collar
42	20A752	1	Agitator shaft **(72")**
	-or-		**-or-**
42	53323	1	Agitator shaft **(48")**
	-or-		**-or-**
42	53322	1	Agitator shaft **(60")**
43	20A754	1	1-3/16 Spacer
44	20A765	1	3/4 Spacer
45	SU618	1	1" Spacer
	-or-		**-or-**
45	57508	1	3-7/16" Spacer **(60")**
46	SU619	1	2-5/8 Spacer
47	SU622	13	4-19/32 Spacer
48	SU623	2	Saddle
	SU636	2	Spiker saddle

Ref No	Part No	No Used	Description
49	SU625	1	Drive chain (15 link)
	20A698	1	Spiker drive chain (14 links) (TR)
50	SU628	1	Idler bracket with shaft
C	SU627	--	Idler assembly complete (Includes items 50–55)
51	SU630	1	Idler gear assembly
52	SU631	2	7/8 Needle bearing
53	FA306	2	5/8 USS Flat washer plated
54	FA407	1	3/16 x 1-1/2 Cotter pin
55	FA409A	1	1/4 – 28 x 5/16 Alemite grease fitting
56	SU637	1	40B18 Sprocket 18T with 1" bore (TR)
	SU613	1	Sprocket 18T with 3/4" bore (STR)
58	FA104	10	5/16 – 18 x 1-1/4 Hex head cap screw
59	FA108	9	3/8 – 16 x 1-3/4 Hex head cap screw
60	FA113	4	1/2 – 13 x 1-1/2 Hex head cap screw
61	FA114	4	1/2 – 13 x 1-3/4 Hex head cap screw
62	FA153	3	#10–24 x 3/8 Round head M/S plated
63	FA155	4	#10–24 x 1 Round head M/S plated
64	FA156	52	1/4 – 20 x 1/2 Round Head Screw
65	FA157	16	1/4 – 20 x 3/4 Round M/S zinc
66	FA158	1	1/4 – 20 x 1 CB zinc
67	FA159	4	1/4 – 20 x 1 Eye bolt
68	FA161	1	5/16 – 18 x 3/8 Socket set screw
69	FA202	8	1/4 – 20 Fin hex nut plated
70	FA203	10	5/16 – 18 Fin hex nut plated
71	FA204	9	3/8 x 16 Hex nut plain
72	FA208	4	1/2 – 13 Fin hex nut
73	FA251	42	10 – 24 Nylok nut plated
74	FA253	1	1/4 – 20 Win nut plated
75	FA254	37	1/4 – 20 Nylok nut zinc
76	FA303	4	1/2 Flat washer plain
77	FA353	10	5/16 Medium lockwasher
78	FA355	9	3/8 Lockwasher plain
79	FA358	8	1/2 Lockwasher plain
80	FA401	28	3/32 x 3/4 Cotter pin
81	FA404	1	1/8 x 1-1/2 Roll pin
82	FA405	3	1/8 x 1-3/4 Roll pin
83	FA411	2	1/4 x 5/8 RD HD Steel rivet
84	FA419	2	Double pitch connect Link
85	SU918	1	Chain guard (STR models)
	-or-		**-or-**
85	53501	1	Chain guard (TR models)
86	1257	2	3/4 Standard flat washer
87	FA446	1	3/4 NC Hex lockut
88	53502	1	Feed shaft asy (48")
	-or-		**-or-**
88	53503	1	Feed shaft asy (60")
	-or-		**-or-**
88	50605	1	Feed shaft asy (72")

CORE AERATORS

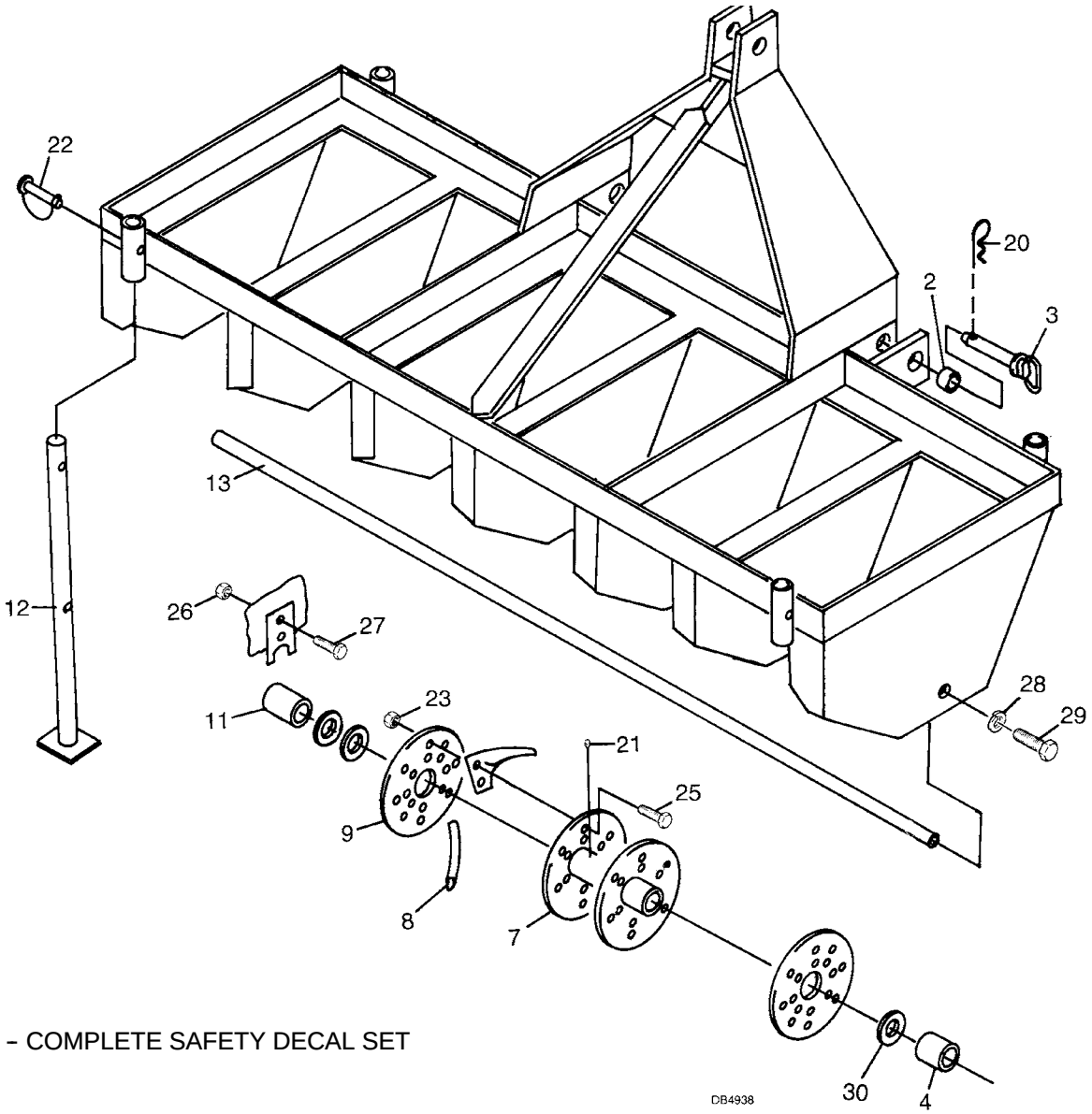

14 – COMPLETE SAFETY DECAL SET

Ref No	Part No	PL48 QTY	PL60 QTY	PL72 QTY	Description
2	D2213	4	4	4	7/8 ID Scraper bushing
3	SU105	2	2	2	Draw pin
4	P1348	2	–	–	End spacer
4	P1360	–	2	–	End spacer
4	P1372	–	–	2	End spacer
7	P22	4	6	6	Spoon hub assembly (No knives or spoons included)
8	P52	64	96	96	3/4 Closed spoon
9	P23	8	12	12	Spoon assembly floating plate
11	P1248	3	–	–	Inside spacer
11	P1260	–	5	–	Inside spacer
12	P19	4	4	4	Plugger stand
13	P1448	1	–	–	Axle shaft **(PL48)**
13	P1460	–	1	–	Axle shaft **(PL60)**
13	P1472	–	–	1	Axle shaft **(PL72)**
14	54466	1	1	1	Complete safety decal set

HARDWARE

Ref No	Part No	Description
20	FA449	3/16 x 3-1/4 #6 Hair pin
21	FA409A	1/4–28 Alemite grease fitting
22	FA514	1/2 x 2-3/4 Round head steel rivet
23	FA220	5/16–18 Nylok nut plated
25	FA511	5/16–18 x 2 Hex head cap screw zinc
26	FA259	3/8–24 Nylok nut zinc
27	FA111	3/8–24 x 1-1/2 Hex head cap screw pltd
28	FA509	3/4 Lockwasher zinc GR5
29	FA120	3/4–10 x 2 Hex head cap screw plain
30	FA328	1-1/4 SAE Flat washer

(Rev. 6/26/98)

INDEX

ASSEMBLY

Delivery Check List (Dealer's Responsibility), 15

Pre-Delivery Check List (Dealer's Responsibility), 15

GENERAL

Bolt Size Chart, 3

Bolt Torque Chart, 7

General Information, 3

Introduction, ii

Models, 1

Specifications, 2

Table of Contents, 1

Warranty, Back Cover

OPERATION

Commencing Mowing, 10

Core Aerator, 9

Front Roller Adjustment

- STR48S, 10
- STR60S, 10
- STR72S, 10

Operating Tips, 11

Pre-Operation Check List (Owner's Responsibility), 10

Seed Control Chart, 11

OPERATION (Cont'd)

Seeding

- STR48S, 11
- STR60S, 11
- STR72S, 11
- TR72S, 11

Super Turf Renovator Roller

- STR48S, 9
- STR60S, 9
- STR72S, 9

Tractor Attachment, 9

Tractor Ground Speed, 8

Turf Renovator Roller

- TR72S, 8

OWNER SERVICE

Lubrication

- Core Aerator, 12
- Renovator, 12

Storage, Core Aerator, 12

SAFETY

Check Lists

- Delivery (Dealer's Responsibility), 15
- Pre-Delivery (Dealer's Responsibility), 15
- Pre-Operation (Owner's Responsibility), 10

Safety Decals, 6

Safety Rules, 4– 5

Safety Symbol (explanation), ii

WARRANTY

Please enter information below and **SAVE FOR FUTURE REFERENCE.**

Date Purchased: _____ From (Dealer): _____

Model Number: _____ Serial Number: _____

WOODS warrants each new WOODS product to be free from defects in material and workmanship. This warranty is applicable only for the normal service life expectancy of the machine or components, not to exceed twelve consecutive months from the date of delivery of the new WOODS product to the original purchaser.

Genuine WOODS replacement parts and components will be warranted for 90 days from date of purchase, or the remainder of the original equipment warranty period, whichever is longer.

Under no circumstances will it cover any merchandise or components thereof, which, in the opinion of the company, has been subjected to negligent handling, misuse, alteration, an accident, or if repairs have been made with parts other than those obtainable through WOODS.

The company in no way warrants engines, batteries, tires or other trade accessories since these items are warranted separately by their respective manufacturers.

Our obligation under this warranty shall be limited to repairing or replacing, free of charge to the original purchaser, any part that in our judgement shall show evidence of such defect, provided further that such part shall be returned within thirty (30) days from date of failure to WOODS, routed through the dealer and distributor from whom the purchase was made, transportation charges prepaid.

This warranty shall not be interpreted to render us liable for injury or damages of any kind or nature to person or property. This warranty does not extend to loss of crops, loss because of delay in harvesting, or any expense or loss incurred for labor, supplies, substitute machinery, rental or for any other reason.

Except as set forth above, WOODS SHALL HAVE NO OBLIGATION OR LIABILITY OF ANY KIND ON ACCOUNT OF ANY OF ITS EQUIPMENT AND SHALL NOT BE LIABLE FOR SPECIAL OR CONSEQUENTIAL DAMAGES. WOODS MAKES NO OTHER WARRANTY, EXPRESS OR IMPLIED, AND, SPECIFICALLY, WOODS DISCLAIMS ANY IMPLIED WARRANTY OF MERCHANTABILITY OR FITNESS FOR A PARTICULAR PURPOSE. SOME STATES OR PROVINCES DO NOT PERMIT LIMITATIONS OR EXCLUSIONS OF IMPLIED WARRANTIES OR INCIDENTAL OR CONSEQUENTIAL DAMAGES, SO THE LIMITATIONS OR EXCLUSIONS IN THIS WARRANTY MAY NOT APPLY.

This warranty is subject to any existing conditions of supply which may directly affect our ability to obtain materials or manufacture replacement parts.

WOODS reserves the right to make improvements in design or changes in specifications at any time, without incurring any obligations to owners of units previously sold.

No one is authorized to alter, modify, or enlarge this warranty nor the exclusions, limitations and reservations.

The limited warranty is effective only if the warranty registration card is returned within ten days of purchase.

PART NUMBER

51707

Woods Equipment Company

2606 Illinois Route 2 South
Post Office Box 1000
Oregon, Illinois 61061

815-732-2141 tel
815-732-7580 fax

WOODS

WOODS
DUAL
GANNON
ALLOWAY
GILL
GANNONBMP
WAIN ROY